для заказа - kyocera@kyocera-tools.ru

Tooling Example ① CNC Automatic Lathe (Gang Type)

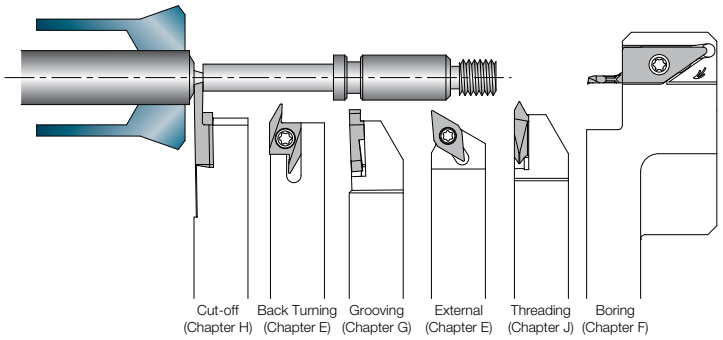

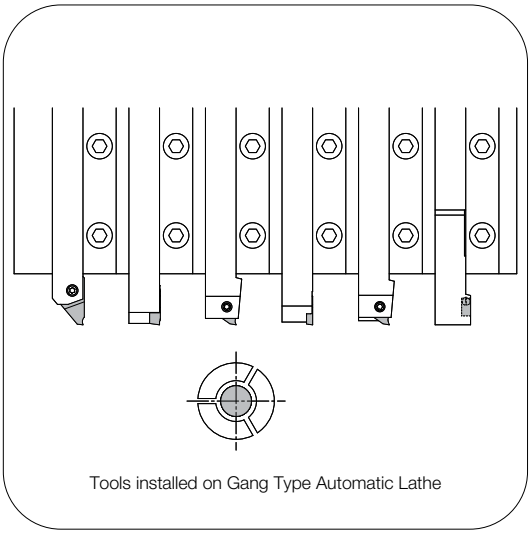

Tools installed on Gang Type Automatic Lathe

Tooling Example ② CNC Automatic Lathe (Gang Type)

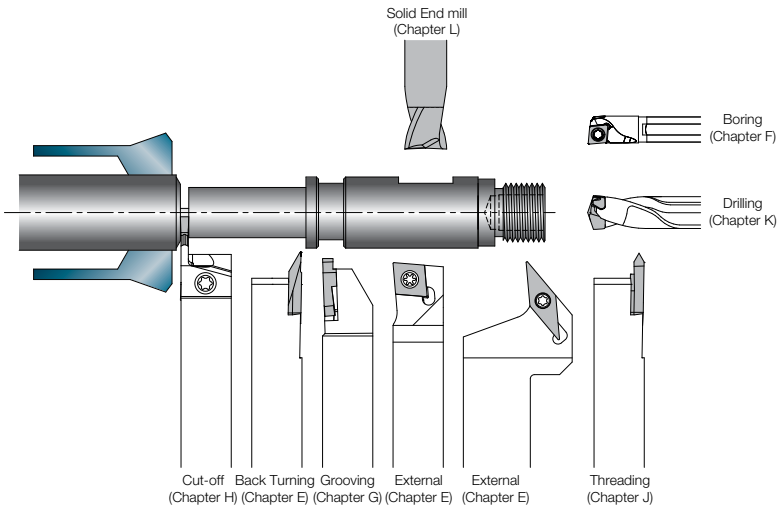

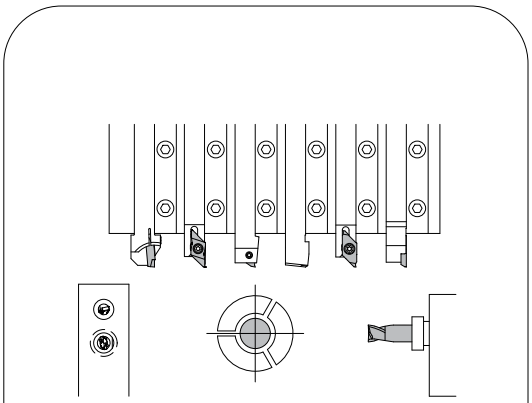

Tools installed on Gang Tool Post + Milling Toolholders

kyocera@kyocera-tools.ru
www.kyocera-tools.ru