для заказа - kyocera@kyocera-tools.ru

External Threading

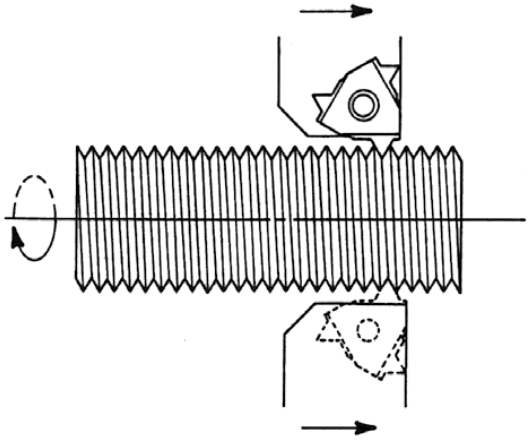

Surface Speed per Minute

$$SFM = 0.262 \times DIA \times RPM$$

Revolutions per Minute

$$RPM = \frac{3.820 \times SFM}{DIA}$$

Feedrate (inches/minute)

$$IPM = IPR \times RPM$$

Internal Threading

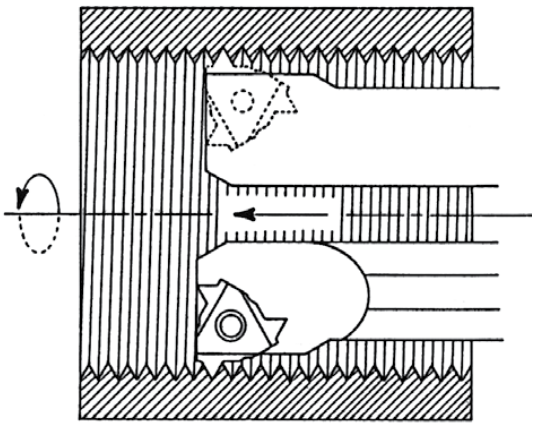

Time in Cut (seconds)

$$T = \frac{60 \times LOC \times NO.\ OF\ PASSES}{IPR \times RPM}$$

Feedrate

Standard Threads

$$IPR = \frac{1}{TPI}$$

Metric Threads

$$IPR = \frac{P_{mm}}{25.4}$$

Definition of Terms

DIA = Diameter of the Workpiece (Inches)

DOC = Depth of Cut (Inches)

EFF = Machine Efficiency

f = Feedrate (See IPM and IPR)

HPM = Horsepower Required at the Motor

HPS = Horsepower Required at the Spindle

IPM = Feedrate (Inches per Minute)

IPR = Feedrate (Inches per Revolution)

IC = Insert inscribed circle (inches)

LOC = Length of Cut (Inches)

Q = Metal Removal Rate (Cubic Inches per Minute)

RPM = Revolutions per Minute

SFM = Surface Speed (Feet per Minute)

T = Time (in Seconds)

$t_{chip\ Max}$ = Maximum Recommended Chip Thickness (Inches)

UHP = Unit Horsepower Factor

1 = Lead Angle