для заказа - kyocera@kyocera-tools.ru

Identification System (Boring Bar / Drill)

T63	H	–	N	08	–	70

Tolerance Symbol	
T63 : HSK-T63 T100 : HSK-T100	

Manual Clamping Hole	
H	Yes
No Code	No

Toolholder	
N	For Boring Bar
C	For Drill

Internal Dia.	
08	Ø8
10	Ø10
⋮	

Toolholder Length (mm)
Length from Gauge Line

Coolant Pipe is Built into Toolholder

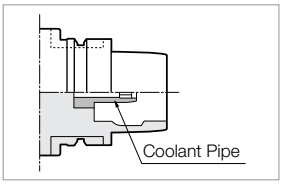

Toolholder for Boring Bars and Drills

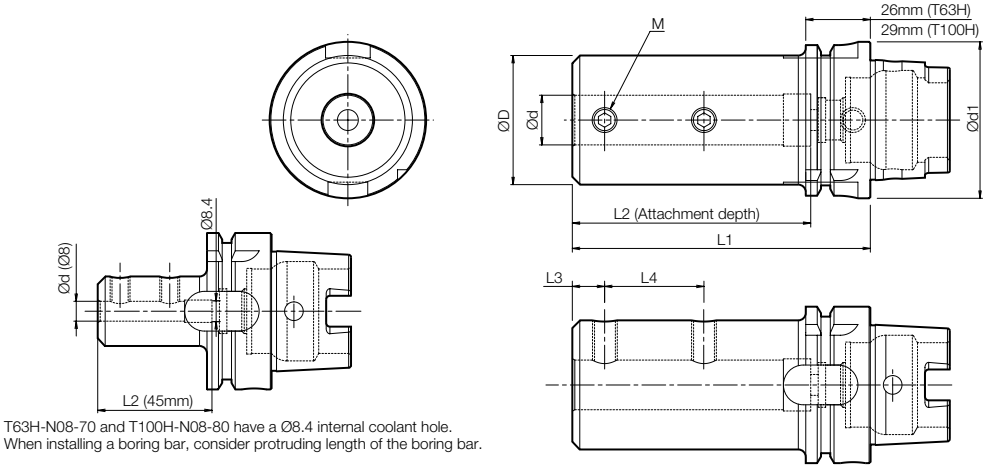

T63H-N08-70 and T100H-N08-80 have a Ø8.4 internal coolant hole.
When installing a boring bar, consider protruding length of the boring bar.

Toolholder Dimensions

Part Number	Previous Part Number	Stock	Dimensions (mm)								Spare Parts			Notes
			Ød	Ød1	ØD	L1	L2	L3	L4	M	Clamp Screw	Wrench	Coolant Pipe	
T63H- N08-70	A63-WH- N08-70	□	8	63	28	70	45	9	20	M8	HS8X10	LW-4	CL63-1	For Boring Bar
T63H- N10-80	A63-WH- N10-80	□	10		35	80	55	9	22		HS8X12			
T63H- N12-90	A63-WH- N12-90	□	12		42	90	65	9	22					
T63H- N16-100	A63-WH- N16-100	□	16		48	100	75	11	30	M10	HS10X16	LW-5		
T63H- N20-120	A63-WH- N20-120	□	20		52	120	95	13	40					
T63H- N25-140	A63-WH- N25-140	□	25		56	140	115	13	50	M12	HS12X16	LW-6		
T63H- N32-160	A63-WH- N32-160	□	32		56	160	135	13	60		HS12X12			
T63H- C20-75	A63-WH- C20-75	□	20	63	52	75	50	13	22	M10	HS10X16	LW-5	CL63-1	*For Drill
T63H- C25-85	A63-WH- C25-85	□	25		56	85	58	15	28	M12	HS12X16	LW-6		
T63H- C32-90	A63-WH- C32-90	□	32		56	90	62	15	30		HS12X12			
T63H- C40-100	A63-WH- C40-100	□	40		68	100	72	18	35	M16	HS16X12	LW-8		
T100H- N08-80	-	□	8	100	28	80	45	9	20	M8	HS8X10	LW-4	CL100-1	For Boring Bar
T100H- N10-90	-	□	10		35	90	55	9	22		HS8X12			
T100H- N12-100	-	□	12		42	100	65	9	22					
T100H- N16-110	-	□	16		48	110	75	11	30	M10	HS10X16	LW-5		
T100H- N20-130	-	□	20		52	130	95	13	40					
T100H- N25-150	-	□	25		62	150	115	13	50	M12	HS12X18	LW-6		
T100H- N32-170	-	□	32		72	170	135	13	60		HS12X20			
T100H- C20-85	-	□	20	100	52	85	50	13	22	M10	HS10X16	LW-5	CL100-1	*For Drill
T100H- C25-90	-	□	25		62	90	58	15	20	M16	HS16X18	LW-8		
T100H- C32-95	-	□	32		72	95	62	15	20					
T100H- C40-105	-	□	40		82	105	72	15	25	M16	HS16X20	LW-8		

* Shorter than boring bar toolholder.

kyocera@kyocera-tools.ru
www.kyocera-tools.ru

Made to Order : □
World Express (Shipping: 7-10 Business Days) : ○