для заказа - kyocera@kyocera-tools.ru

KGBA (External Grooving)

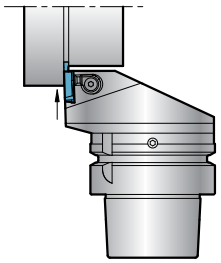

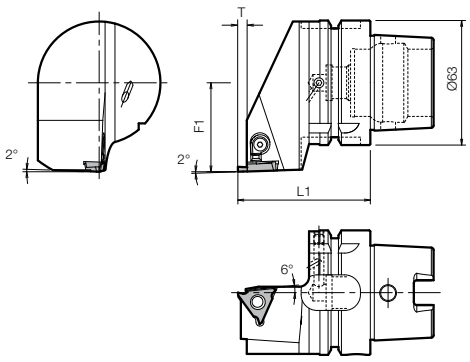

Right-hand Shown

Toolholder Dimensions

Part Number	Previous Part Number	Stock	Dimensions (mm)			Spare Parts			Applicable Inserts ➡ G11
						Clamp Set	Wrench	Coolant Pipe	
			L1	F1	T				
T63H- KGBAR-16	A63-WH- KGBAR-16	□	67	45	2.5	LGBA-16RS	FT-15	CL63-1	GBA32R Type
KGBAR-22-15	KGBAR-22-15	□	67	45	4	LGBA-22RS			GBA43R Type
KGBAR-22-25	KGBAR-22-25	□			4.5				
KGBAR-22-35	KGBAR-22-35	□			5.5				
T63H- KGBAL-16	A63-WH- KGBAL-16	□	67	45	2.5	LGBA-16LS	FT-15	CL63-1	GBA32L Type
KGBAL-22-15	KGBAL-22-15	□	67	45	4	LGBA-22LS			GBA43L Type
KGBAL-22-25	KGBAL-22-25	□			4.5				
KGBAL-22-35	KGBAL-22-35	□			5.5				

• Dimension T shows the distance from the toolholder to the cuttting edge.

KTN (Threading)

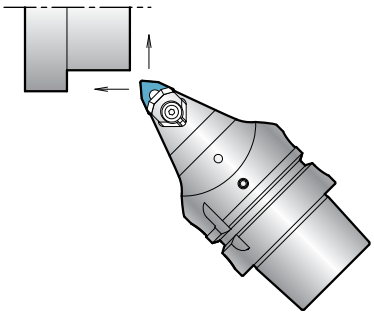

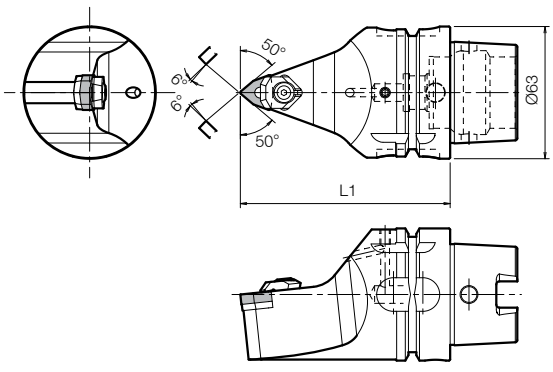

Right-hand Shown

Toolholder Dimensions

Part Number	Previous Part Number	Stock	Dimensions (mm)		Spare Parts					Applicable Inserts ➡ J11
					Clamp Set	Wrench	Shim	Shim Screw	Coolant Pipe	
			L1	F1						
T63H- KTNR-16	A63-WH- KTNR-16	□	67	45	CPS-5S	FT-15	TN-32	SP3X8	CL63-1	16ER Type
KTNR-22	KTNR-22	□			CPS-6S	LW-3	TN-43			22ER Type

kyocera@kyocera-tools.ru
www.kyocera-tools.ru

□ : Made to Order
○ : World Express (Shipping: 7-10 Business Days)