для заказа - kyocera@kyocera-tools.ru

SVLB (External / Copying)

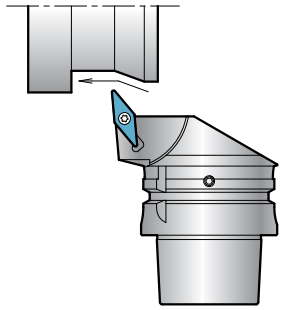

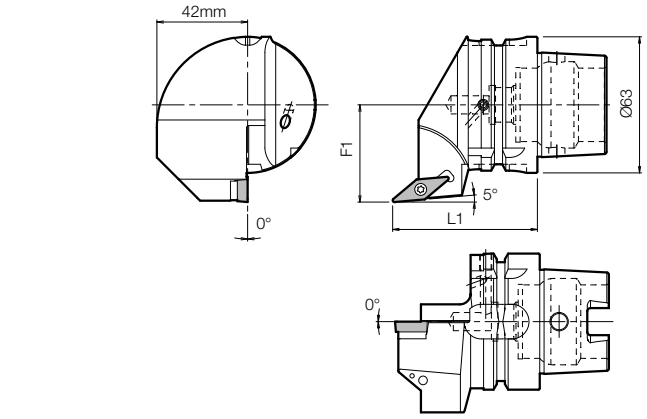

Right-hand Shown

Applicable Inserts	
VB□T VBGW VCGT	33..

Toolholder Dimensions

Part Number		Stock	Dimensions (mm)		Spare Parts					
					Clamp Screw	Wrench	Shim	Shim Screw	Wrench	Coolant Pipe
			L1	F1						
T63H-	SVLBR-DX16N	□	65	45	SB-40125TRN	FT-15	SVN-32N	SS-4N	LW-4	CL63-1
	SVLBL-DX16N	□								

SVVB (External / Copying)

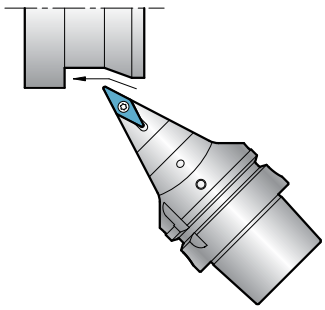

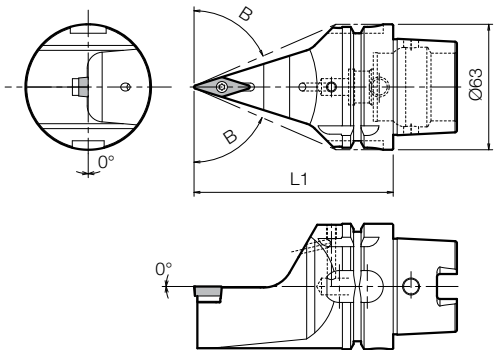

Applicable Inserts	
VB□T VBGW VCGT	33..

Toolholder Dimensions

Part Number		Stock	Dimensions (mm)		Spare Parts					
					Clamp Screw	Wrench	Shim	Shim Screw	Wrench	Coolant Pipe
			L1	F1						
T63H-	SVVBN-H16N	□	100	66.5	SB-40125TRN	FT-15	SVN-32N	SS-4N	LW-4	CL63-1
	SVVBN-L16N	○	140	72.5						

• Angle B shows the interference angle from the line of cutting edge point and toolholder.

kyocera@kyocera-tools.ru
www.kyocera-tools.ru

Made to Order : □
World Express (Shipping: 7-10 Business Days) : ○