для заказа - kyocera@kyocera-tools.ru

Identification System (for External)

Interface Size	Manual Clamping Hole		Shank Size	Hand of Tool		Toolholder Length
T63 : HSK-T63 T100 : HSK-T100	H	Yes	25mm Square (Height / Width)	R	Right-hand	Length from Gauge Line (mm)
	No Code	No		L	Left-hand	

T63 **H** – **S2525** **R** – **105** ... (Toolholder for Square Shank)

A63 (Previous Description) **P** **C** **L** **N** **R** – **DX** **12** ... (Solid Type)

Clamping System	Insert Shape	Cutting Edge Angle	Insert Relief Angle	Hand of Tool	Toolholder Length	Insert Size
P : Lever Lock M : Multi-Lock W : Wedge Lock S : Screw Clamp	C : 80° Diamond D : 55° Diamond T : 60° Triangle V : 35° Diamond W : 80° Trigon	E 60°, G 90°, J 93° L 95°/95°, M 50°, N 63° V 72.5°	N : 0° B : 5°	R Right-hand L Left-hand N Neutral	Length from Gauge Line (mm) DX : 65 H : 100 L : 140	T, C, D, V

Coolant Pipe is Built into Toolholder

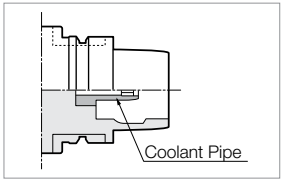

Toolholder for Square Shank (for External / Facing)

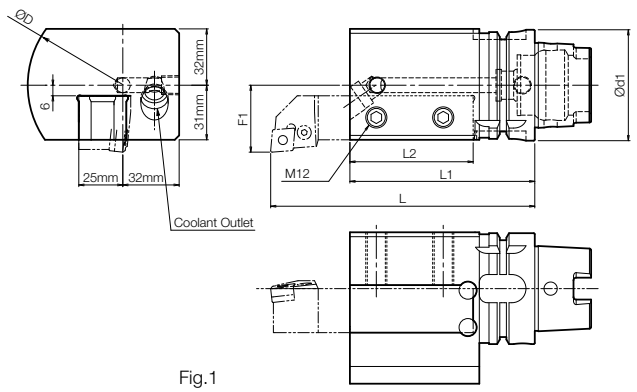

Fig.1

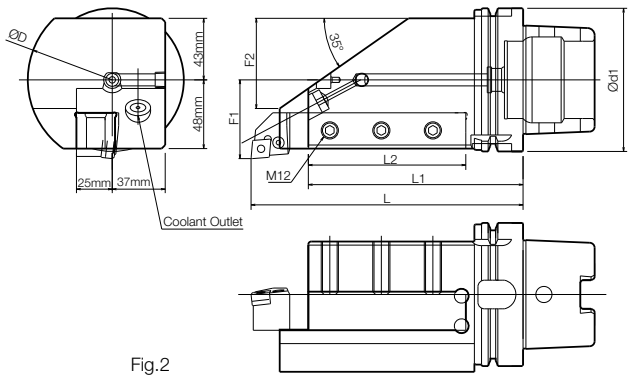

Fig.2

Right-hand Shown

Toolholder Dimensions

Part Number	Previous Part Number	Stock	Dimensions (mm)							Drawing	Spare Parts		
			Ød1	ØD	L	L1	L2	F1	F2		Clamp Screw	Wrench	Coolant Pipe
T63H- S2525R-105	A63-WH- S2525R-105	○	63	108	150	105	70	38	-	Fig.1	HS12X25	LW-6	CL63-1
S2525L-105	S2525L-105	○											
T100H- S2525R-150	-	□	100	118	190	150	110	55	63	Fig.2	HS12X30		CL100-1
S2525L-150		□											

- Coolant Outlet Direction is Adjustable
- For 25mm Square Shank

kyocera@kyocera-tools.ru
www.kyocera-tools.ru

□ : Made to Order
○ : World Express (Shipping: 7-10 Business Days)